AQUAS
Simple. Reliable. Intelligent.

ISO9001 Certification

RoHS

CE

FC

SMR63
Radar Flow Velocity Meter

RS485 Communication. All-in-One Compact Housing.

The Radar Flow Velocity and Level Meter is connected directly via RS485 communication interface, providing simple, reliable, cost-saving process data with remote monitoring, calibration, configuration and diagnostic capabilities. Housing in a robust IP68 proof enclosure, 1500 N tensile strength Kevlar reinforced cable, up to 1.2 km digital data transmission, the transmitter is ideally used in water/wastewater industry.

Advantages

- All-in-One Compact Housing, Built-in Transmitter and Sensors
- Robust IP68 Water Submersible Protection, Directly Installed in the Field, No Cabinet Required
- 80 GHz Superier Focusing Radar Beam, Beam Angle Less than 6° to Auoid Obstacles and Build up in Confined Spaces
- 120 dB Wide Dynamic Range to Accurately and Reliably Measure Poorly Reflective Liquides, Liquid down to Bottom level, Even with Surface Foam, Extremely Turbulent Flow, and Condensation on Antenna
- Advanced Intelligent Algorithm and Signal Processing Technology to Eliminate Echo Noise
- Surcharge Hydrostatic Level Sensor, Continue to Provide Uninterrupted Level Measurement
- Plug & Play, On-line Realtime Measurement
- Ultra Low Power Consumption, Ideal for Outdoor Applications
- 1500 N Tensile Strength Kevlar Reinforced Cable
- Surge Protection for Power and RS485 Communication
- RS485 Digital Communication, Minimize Cabling and Engineering Cost
- Standard Modbus RTU Protocol, Direct Connected with PLC, HMI
- Built-in tilt sensor, Auto Angle Compensation
- Not effected by Temperature, Rain, Snowfall, Turbidity, Suspended Solids, Vapor, Steam and Sand Storm
- Onboard Memory Allowing Users Easily Calibrate and Configure Sensor at Lab and Distribute to Various Fields and Sites
- AQCFG Software Tool for Data Monitoring, Calibration , Configuration and Diagnosis

Applications

Stormwater, surface water, wastewater

Measurement Method

The sensor combines proven radar measurement technology with state-of-the-art spectral signal processing technology to provide a reliable and accurate way to measure velocity of flow.

Installation

Wall mounting, pole mounting

Specifications

General	
Output Signal	RS485 (Modbus RTU protocol), 19,200 bps, 8 data bits, no parity, 1 stop bit; 4~20 mA, HART Protocol (optional)
Data Resolution	16 bits (0.001% FS)
Surge Protection	1,500 VDC
Power	12 VDC, 145 mA
Protection	Polarity, Overload, Short circuit
Safety	CE, FCC
Radar Flow Velocity	
Frequency	24 GHz ; 80 GHz (optional)
Radar angle	12° (Azimuth) , 24° (Elevation)
Max. Measurement Distance	0.02~30 m
Measurement Range	0.02~20 m/s, bi-directional
Accuracy	±1% of reading
Resolut ion	1 mm/s
Min. Wave Height	1 mm
Operating Pressure	-1~3 Kgf/cm^2
Operating Temperature	-40~85 °C
Response Time	10 secs
Calibration Interval	Typical 12 months
Connection	M16X1.5 plug fixed cable ; M12 connector, 5-pin
Housing Material	POM ; PVDF (optional)
Cable	Kevlar reinforced PUR cable, 1500N tensile strength
Dimensions	180(W)X156(H) mm (no hydrostatic level sensor) ; 180(W)X194(H) mm (includes hydrostatic level sensor)
Weight	transmitter: approx. 2.7 Kg (no hydrostatic level sensor), 3 Kg (includes hydrostatic level sensor) ; cable: 80 g/m
Radar Level	
Measurement Method	Radar
Frequency	80 GHz
Radar angle	6°
Measurement Range	SMR63-2 : 0.2~30 m ; SMR63-3 : 0.2~15 m
Accuracy	±1 mm
Resolution	0.1 mm
Protection	IP68
Hydrostatic Level	
Measurement Range	0~10 m
Accuracy	±0.1% FS (SS316L); ±0.25% FS (Titanium)
Resolution	0.01% FS
Repeatability	±0.025% FS
Stability (annual)	±0.1% FS
Safety Load	3 X measurement range
Rupture	>4 X measurement range
Calibration Interval	Typical 12 months
Temperature	
Sensor	Pt1000
Measurement Range	-30~75 °C
Accuracy	± 0.1 °C
Resolution	0.01 °C
Repeatability	0.1 °C

Ordering Codes

Ordering Codes: SMR63 - □ - □ - □□□ - 3 - 0 - 0 - □

Measurement Range
- Radar Velocity (0.02~20 ms) — 1
- Radar Velocity (0.02~20 m/s)+Radar Level (0~30 m) — 2
- Radar Velocity (0.02~20 m/s)+Radar Level (0~15 m) — 3

Sensor
- Radar Velocity — 0
- Radar Velocity+Radar Level — 1
- Radar Velocity+Radar Level+Hydrostatic Level — 2
- Radar Velocity+Radar Level+Hydrostatic Level + Temperature — 3

Cable Length (m)
- 5 — 005
- 10 — 010
- Custom — 001~999

Cable Type
- PUR

Housing
- POM

Wiper
- None

Wire Connection
- Bare Wire — 0
- M12 Connector — 1

Dimensions

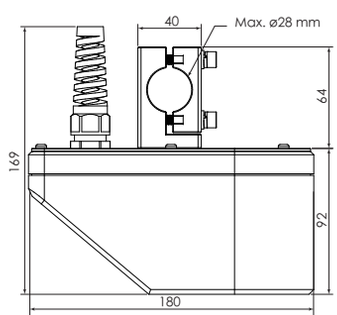

No Hydrostatic Level Sensor

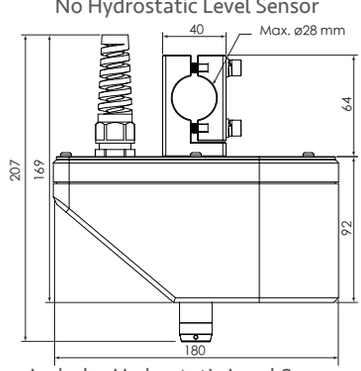

Includes Hydrostatic Level Sensor

AQUAS Simple. Reliable. Intelligent.

AQUAS Inc.
Taipei Office
Add：4F.-2, No. 56, Ln. 321, Yangguang St., Neihu Dist., Taipei City 11491, Taiwan. R.O.C.
T : +886-2-8797-5358#240
F : +886-2-2657-8926
service@aquas.com.tw

Taichung Office
Add：5F., No. 190, Dadun 14th St., Nantun Dist., Taichung City 408 , Taiwan. R.O.C.
T： +886-4-2326-8307